# Kako dobiti bolje pojačalo?

Kakve otpore na komponentama vidi mali AC signal?
→ nijet će dinamičke otpore:

* izlazni dim tranzistora bio jako velik

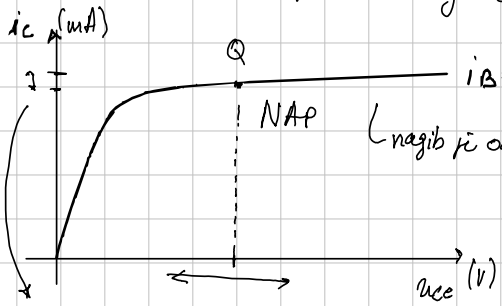


↳ nagib je određen sa $r_{CE}$* (10, 100-ak kΩ)

$i_C$ se malo mijenja → ima dobre karakteristike strujnog izvora unutarnjeg otpora $r_{CE}$

## ⇒ Bipolarno diferencijsko pojačalo sa strujnim izvorom:

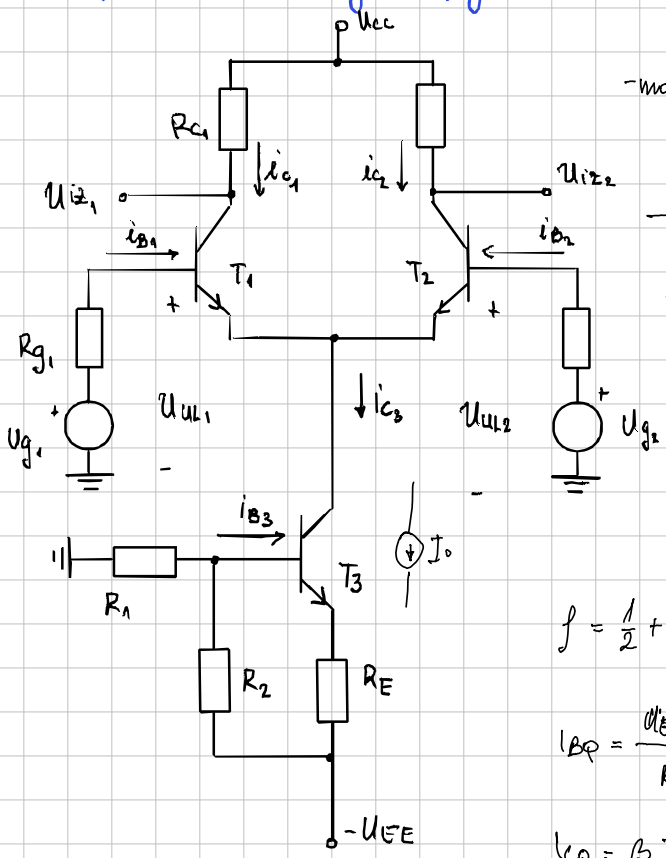


- moramo se staviti u NAP da bi $T_3$ radio kao strujni izvor

→ zašto $T_3$ umjesto većeg $R_E$?

····→ izvedba s $R_E$: $f = \left|\frac{A_{vd}}{A_{vz}}\right|$

$$f = \dots = \frac{1}{2} + \frac{R_E(1+h_{fe})}{R_{g_2} + r_{be_2}}$$

uz $R_{g_1} = R_{g_2} = 0$, $r_{be_2} = \frac{U_T}{I_{BE_2}}$,

$I_{CQ_2} = I_{BQ} \cdot \beta$

$$f = \frac{1}{2} + \frac{R_E(1+h_{fe})}{r_{be_2}} = \frac{1}{2} + g_{m_2} \cdot R_E = \frac{1}{2} + \frac{I_{CQ_2} R_E}{U_T}$$

$$I_{BQ} = \frac{U_{EE} - U_{BEQ}}{R_1 + (1+\beta)2R_E}, \quad U_{EE} = \text{konst.}$$

$$I_{CQ} = \beta I_{BQ} \approx \frac{U_{EE} - U_{BEQ}}{2R_E}$$

⇒ $R_E \uparrow$ $I_{CQ} \downarrow$, znači jedini način da promijenimo $R_E$ je promjenom $U_{EE}$, a te veličine nisu dobre

⇒ Bipolarno diferencijsko pojačalo sa strujnim izvorom:

STATIKA

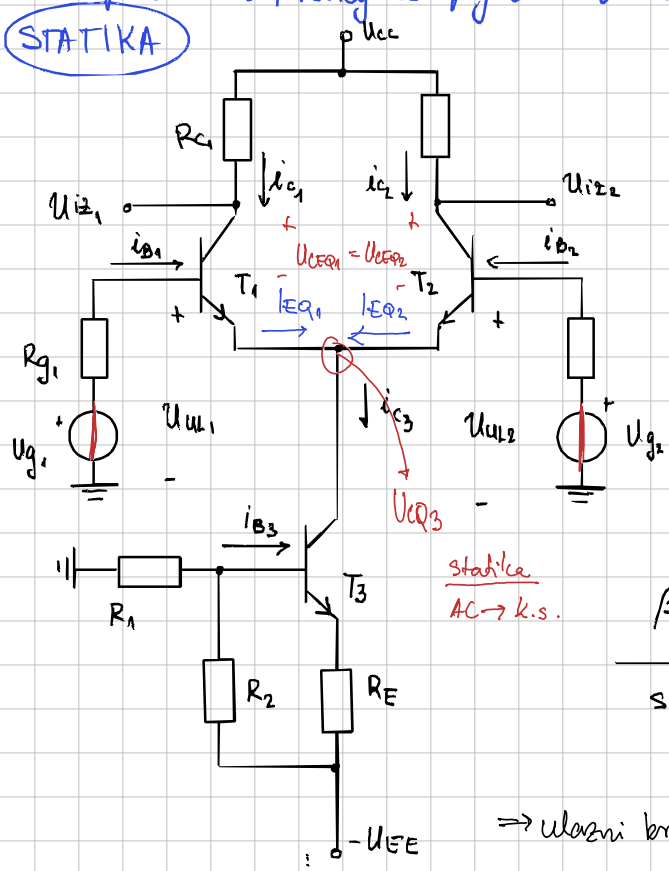


statika

AC → k.s.

Primjer 4.)

$U_{CC} = U_{EE} = 15V$

$R_{g_1} = R_{g_2} = 500\,\Omega$

$R_{C_1} = R_{C_2} = 1.5k\,\Omega$

$R_1 = 2k\,\Omega$, $R_2 = 2{,}1\,k\,\Omega$

$R_E = 2{,}2\,k\,\Omega$

$\beta = 100$, $U_\gamma = 0{,}7\,V$

struje i napon u $Q_{SRT}$?

⇒ ulazni brog T možemo nadomjestiti po Thevenin

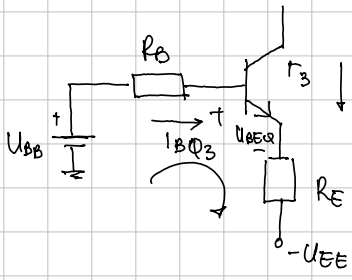


$I_{EQ_3} = (1+\beta)\, I_{BQ3}$

$$\boxed{U_{BB} = -U_{EE} \cdot \frac{R_1}{R_2 + R_1}}$$

$U_{BB} = -7.32\,V$

$R_B = R_1 \| R_2 = \dots = 1.02\,k\,\Omega$

$$-U_{BB} + R_B \cdot I_{BQ3} + R_E \cdot (1+\beta)\, I_{BQ3} + U_{BEQ} - U_{EE}$$

$$U_{BB} - U_{BEQ} + U_{EE} = I_{BQ3}\left(R_B + (1+\beta) R_E\right) \Rightarrow \boxed{I_{BQ3} = \frac{U_{BB} - U_{BEQ} + U_{EE}}{R_B + (1+\beta) R_E}} = 1.33\,\mu A$$

$$I_{CQ3} = \beta \cdot I_{BQ3} = 3.13\,mA$$

$$I_{CQ1} = I_{CQ2} = \frac{\beta}{1+\beta} \cdot I_{EQ} = \frac{\beta}{1+\beta} \cdot \frac{I_{CEQ3}}{2} = 1.55\,mA$$

$U_{BEQ1} = U_{BEQ2}$

$$\boxed{U_{CQ3} = \emptyset - I_{BQ1} \cdot R_{g1} - U_{BEQ}} = -0.708\,V$$

$$\boxed{U_{CEQ3} = U_{CQ3} - U_{EQ3} = U_{CQ3} - (-U_{EE}) + I_{CQ3} \cdot R_E} = 7.34\,V$$

$$\boxed{U_{CEQ1} = U_{CEQ2} = U_{CQ1} - U_{CQ3} = (U_{CC} - I_{CQ} \cdot R_C) - U_{CQ3}} = 13{,}4\,V$$

$$\boxed{I_{CQ1} = I_{CQ2} = I_{CQ}}$$

Primjer 1.5) → trebamo nadomjestiti Tranzistor s njegovim linearnim modelom

DINAMIČKI PARAMETRI

$$r_{be_1} = r_{be_2} = \frac{U_T}{I_{BQ1,2}} = \dots = 1.61\,k\Omega$$

$$r_{be_3} = \frac{U_T}{I_{BQ3}} = 799\,\Omega$$

$$r_{ce_1} = r_{ce_2} = \frac{U_{CEQ} + U_A}{I_{CQ}}$$

* zadan, opisuje nagib izlazne karakt.

$r_{ce_1} = r_{ce_2} = 138\,k\Omega$

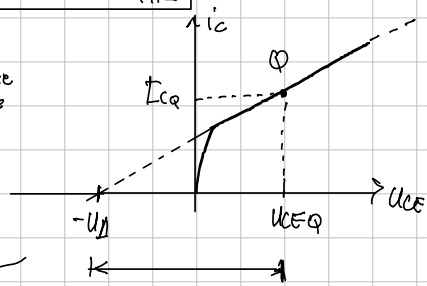


nagib $u_r = r_{ce} = \frac{U_{CEQ} + U_A}{I_{CQ}}$

$$r_{ce_3} = \frac{U_{CEQ3} + U_A}{I_{CQ3}} = \dots = 66.2\,k\Omega$$

Izlazni otpor strujnog izvora koji vidimo u $C_3$

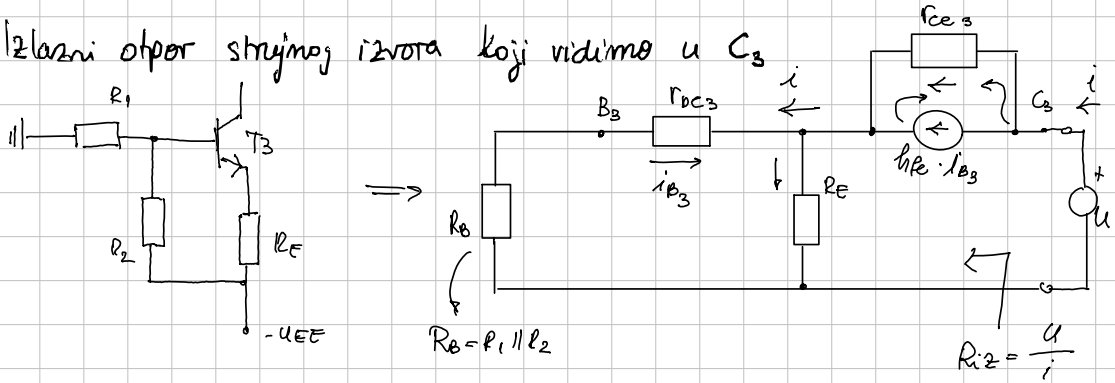


$$i_{B_3} = -i \cdot \frac{R_E}{R_B + r_{be_3} + R_E} = -i \cdot \frac{R_E}{R} \quad ; \quad R = R_B + r_{be_3} + R_E$$

$$u = (i - h_{fe} \cdot i_{b_3})\, r_{ce_3} + (i + i_{b_3}) \cdot R_E$$

$$u = i\left[\left(1 + h_{fe} \cdot \frac{R_E}{R}\right) r_{ce_3} + \left(1 - \frac{R_E}{R}\right) \cdot R_E\right] = i\left[r_{ce_3} + h_{fe} \cdot \frac{R_E}{R} \cdot r_{ce_3} + R_E - \frac{R_E^2}{R}\right]$$

$$u = i\left[r_{ce_3} + R_E\left(h_{fe} \frac{r_{ce3}}{R} + 1 - \frac{R_E}{R}\right)\right] = i\left[r_{ce_3} + R_E\left(1 + \frac{h_{fe} \cdot r_{ce3} - R_E}{R}\right)\right] \Big/ : i$$

$$\frac{u}{i} = R_{iz} \rightarrow \boxed{R_{iz} = r_{ce} + R_E\left(1 + \frac{h_{fe} \cdot r_{ce} - R_E}{R}\right)} = 3690\,k\Omega$$

# Pojačanje za zajedničke signale

* to je ona ista shema

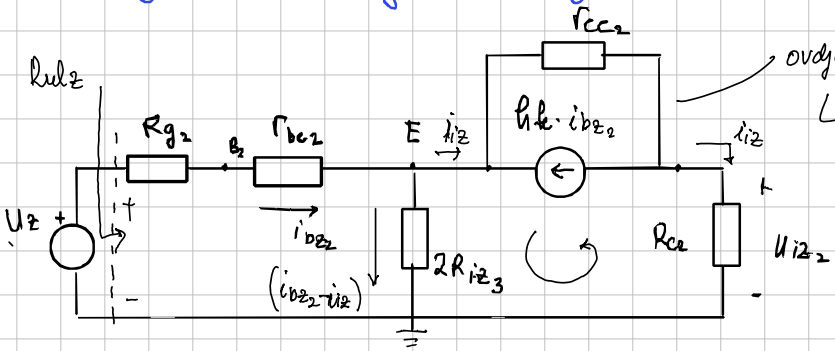


ovdje moramo uključiti $r_{ce}$

↳ jer imamo $R_{iz_3}$ koji je red veličina $r_{ce_2}$

dijelimo struje na to dvije pa ako zanemarimo $r_{ce}$ → bit će velike greške

$$A_{Vz} = \frac{U_{iz_2}}{U_z} = \frac{i_{iz} \cdot R_{c2}}{i_{bz_2} \cdot R_{ulz}} = A_{Iz} \cdot \frac{R_{c2}}{R_{ulz}} \qquad R_{ulz} = \frac{U_z}{i_{bz_2}}$$

petlja: $(i_{bz_2} - i_{iz}) \cdot 2R_{iz_3} - i_{iz} \cdot R_{C_2} - (i_{iz} + h_{fe} \cdot i_{bz_2}) \cdot r_{ce_2}$

$$i_{bz_2}\left[2R_{iz_3} - h_{fe} \cdot r_{ce_2}\right] = i_{iz}\left[2R_{iz_3} + R_{c_2} + r_{ce_2}\right]$$

$$i_{iz} = i_{bz} \frac{2R_{iz_3} - h_{fe} \cdot r_{ce_2}}{2R_{iz_3} + R_{c_2} + r_{ce_2}}$$

$$A_{Iz} = \frac{i_{iz}}{i_{bz_2}} = -\frac{h_{fe} \cdot r_{ce_2} - 2R_{iz_3}}{2R_{iz_3} + R_{c_2} + r_{ce_2}} = \dots = \underline{\underline{-0.854}}$$

$$R_{ulz} = \frac{U_z}{i_{bz_2}} \longrightarrow U_z = i_{bz_2} \cdot (R_{g_2} + r_{be_2}) + (i_{bz_2} - i_{iz}) \cdot 2R_{iz_3}$$

$$U_z = i_{bz_2}(R_{g_2} + r_{be_2}) + (i_{bz_2} - A_I \cdot i_{bz_2}) \cdot 2R_{iz}$$

$$U_z = i_{bz_2}\left(R_{g_2} + r_{be_2} + (1 - A_I) \cdot 2R_{iz}\right)$$

$$R_{ulz} = R_g + r_{be_2} + (1 - A_I) \cdot 2R_{iz} = \dots = 13{,}68\,M\Omega$$

jako veliko! gušćuje ulaz

$$\Longrightarrow A_{Vz} = A_{Iz} \cdot \frac{R_{c2}}{R_{ulz}} = -0.854 \cdot \frac{1.5 \times 10^3}{13{,}68 \times 10^6} \longrightarrow \boxed{A_{Vz} = -9.36 \cdot 10^{-5}}$$

→ pojačanje degenerirano jako velikim din. otporom

→ PRETPOSTAVKA $r_{ce_2} = \infty$ → $A_{Vz} \approx \frac{-R_{c2}}{2R_{iz_3}} = -2 \times 10^{-4}$ (2 puta veće od točnog rezultata)

# Diferencijski signal

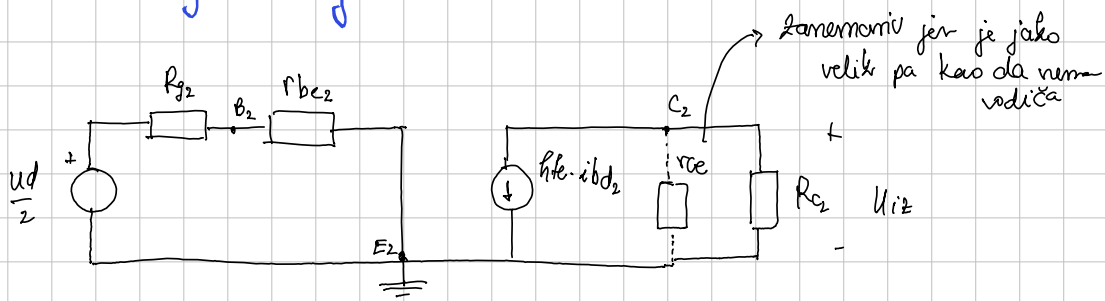


$$A_{vd_2} = \frac{U_{iz_2}}{U_d} = \frac{1}{2} \cdot \frac{U_{iz_2}}{\frac{U_d}{2}} = \frac{-1}{2} \cdot \frac{h_{fe} \cdot R_{c_2}}{R_g + r_{be_2}} = \underline{\underline{-35.9}}$$ (ostalo isto

Faktor potiskivanja: $f = \left| \frac{A_{vd}}{A_{vz}} \right| = 3.8 \times 10^5 = 112\,dB$

Što kada primjenimo neke realne signale? → Primjer 6.)

a) $U_{g_{1m}} = -5\,mV$ $\quad U_{g_{2m}} = 5\,mV$

$$U_{z_m} = \frac{U_{g_{1m}} + U_{g_{2m}}}{2} = \emptyset \qquad U_{d_m} = U_{g_{2m}} - U_{g_{1m}} = 10\,mV$$

$$U_{iz_m} = A_{vz_2} \cdot U_{z_m} + A_{vd_2} \cdot U_{d_m} = \underline{\underline{-359\,mV}}$$ → isto

b) $U_{g_{1m}} = 20\,mV$ $\quad U_{g_{2m}} = 30\,mV$

$U_{z_m} = 25\,mV$ $\quad U_{d_m} = 10\,m$ $\longrightarrow$ $U_{iz_m} = -9.36 \times 10^{-5} \cdot 25 + (-35{,}9) \cdot 10$

$= -0{,}002 - 359 = -359\,mV$

↑

puno veće gušenje pa je manji doprinos, skoro skroz prigušeni istofazni signal

# Pojačanje zajedničkog ili diferencijskog signala

→ koristimo samo jedan izlaz ili razliku dvaju izlaza

**Zajednički signal:**

→ polazimo s istim fazama signala => pojačanja na izlazima jednaka

$$A_{vz_2} = \frac{U_{iz_2}}{U_z} = \frac{U_{iz_1}}{U_z} = A_{vz_1} \Rightarrow A_{vz} = \frac{U_{iz}}{U_z} = \frac{U_{iz_2} - U_{iz_1}}{U_z} = \emptyset$$

idealizirani slučaj, u stvarnosti postoje tehnološka odstupanja

**diferencijski signal:** → suprotne faze na ulazima => protufaze i na izlazima

· pojačanja jednaka po iznosu, ali suprotni po predznaku

$$A_{vd_2} = \frac{U_{iz_2}}{U_d} = -\frac{U_{iz_1}}{U_d} = -A_{vd_1}$$

$$A_{vd} = \frac{U_{iz}}{U_d} = A_{vd_2} - A_{vd_1} = 2A_{vd_2} \rightarrow 2\times \text{ veće pojačanje}$$

# Prijenosna karakteristika

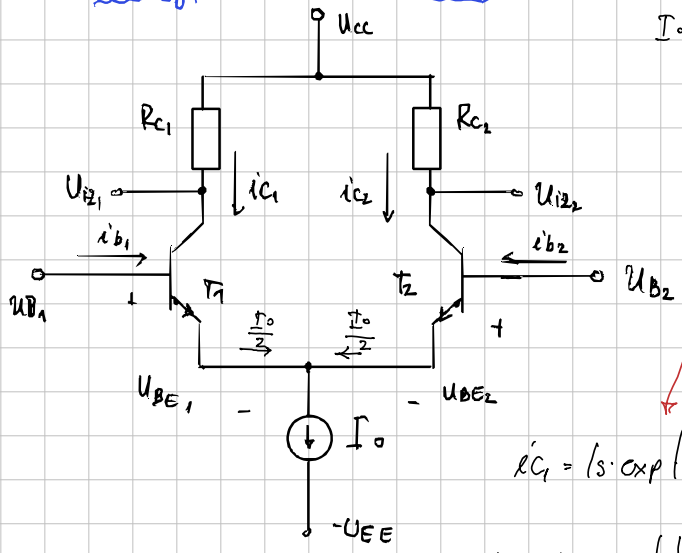


$$I_0 = \frac{U_E + U_{EE}}{R_E} \approx \frac{U_{EE}}{R_E}$$

$$I_0 \approx i_{C_1} + i_{C_2}$$

nismo mijenjali

$$i_{C_1} = I_S \cdot \exp\left(\frac{U_{BE1}}{U_T}\right) \cdot \exp\frac{U_{BE_2} - U_{BE_2}}{U_T}$$

$$i_{C_2} = I_S \cdot \exp\left(\frac{U_{BE2}}{U_T}\right)$$

$$i_{C_1} = I_S \cdot \exp\left(\frac{U_{BE1}}{U_T}\right) \cdot \exp\left(\frac{U_{BE2}}{U_T}\right) \cdot \exp\left(-\frac{U_{BE2}}{U_T}\right)$$

$$i_{C_1} = I_S \cdot \exp\left(\frac{U_{BE2}}{U_T}\right) \cdot \exp\left(-\frac{U_{BE_2} - U_{BE1}}{2}\right) \rightarrow U_D$$

diferencijski napon

$$\Rightarrow i_{C_1} = I_{C_2} \cdot \exp\left(-\frac{U_{BE_2} - U_{BE1}}{U_T}\right)$$

$$i_{C_1} = I_{C_2} \cdot \exp\left(-\frac{U_D}{U_T}\right) \rightarrow I_{C_2} \approx \frac{I_0}{1 + \exp\left(-\frac{U_D}{U_T}\right)}, \quad i_{C_1} \approx \frac{I_0}{1 + \exp\left(\frac{U_D}{U_T}\right)}$$

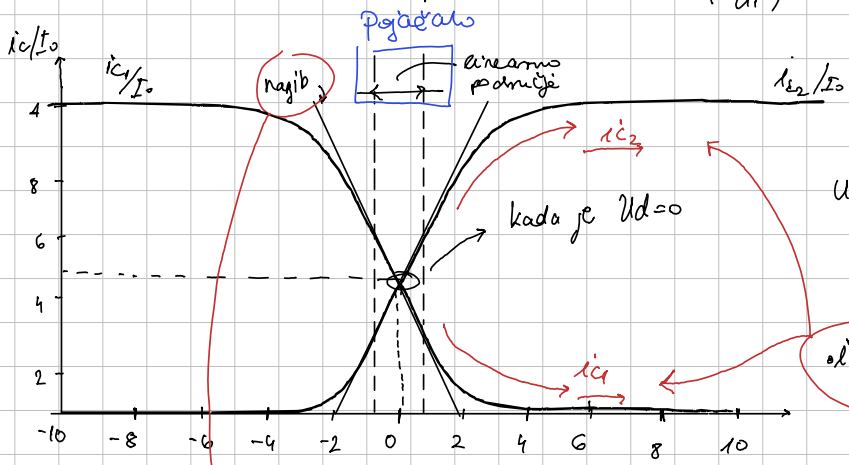


$U_D = U_{BE_2} - U_{BE1}$

$U_D$ pozitivniji

↳ $U_{BE_2}$ → propusnije pol

↳ $U_{BE_1}$ → sve manji propusno pol.

$i_{C_2} \uparrow, \; i_{C_1} \downarrow$

$$U_D = 0 \rightarrow G_{m\,max} = \left|\frac{d i_{C1}}{d u_D}\right| = \left|\frac{d i_{C_2}}{d u_D}\right| = \frac{I_0}{4 U_T}$$

$$A_{vd,\,max} = -G_{m\,max} R_{C_2} = -\frac{I_0}{4 U_T} \cdot R_{C_2} = -\frac{g_{m2} \cdot R_{C_2}}{2}$$